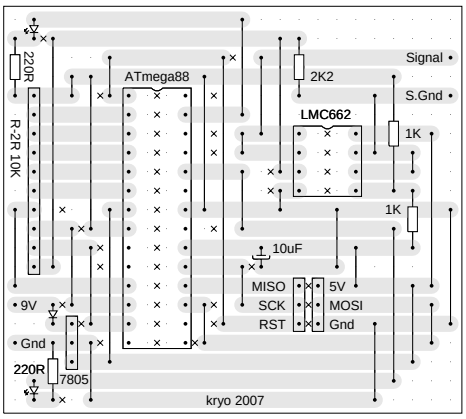
220R
R-2R 10K
ATmega88
2K2
Signal
S.Gnd
LMC662
1K
1K
10uF
MISO
SCK
RST
5V
MOSI
Gnd
9V
Gnd
220R
7805
kryo 2007